DocuSign Envelope ID: 683A808E-0B0B-4CC7-833E-E2247A5302C8

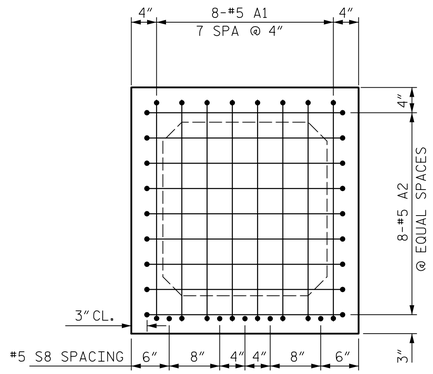

END ELEVATION

SHOWING PLACEMENT OF #5 "A" BARS
(STRAND LAYOUT NOT SHOWN)

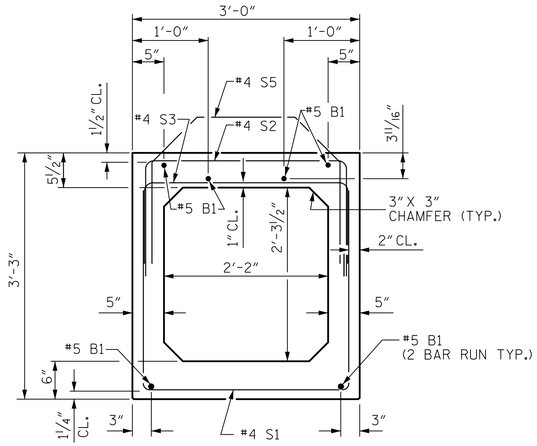

BOX GIRDER SECTION

(STRAND LAYOUT NOT SHOWN)

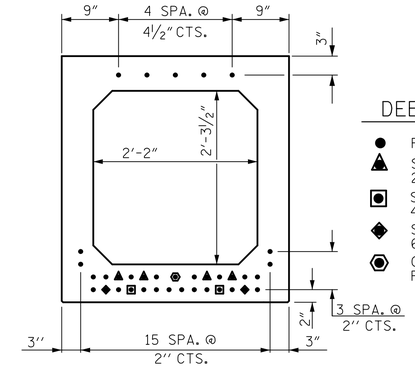

TYPICAL STRAND LOCATION

(35 STRANDS REQUIRED)

DEBONDING LEGEND

- FULLY BONDED STRANDS
- STRANDS DEBONDED FOR 2'-0" FROM END OF GIRDER
- STRANDS DEBONDED FOR 4'-0" FROM END OF GIRDER
- STRANDS DEBONDED FOR 6'-0" FROM END OF GIRDER
- OPTIONAL STRAND FULLY DEBONDED

0.6" Ø LOW RELAXATION STRAND LAYOUT

0.6" Ø L. R. GRADE 270 STRANDS

AREA (SQUARE INCHES)	ULTIMATE STRENGTH (LBS. PER STRAND)	APPLIED PRESTRESS (LBS. PER STRAND)
0.217	58,600	43,950

BAR TYPES

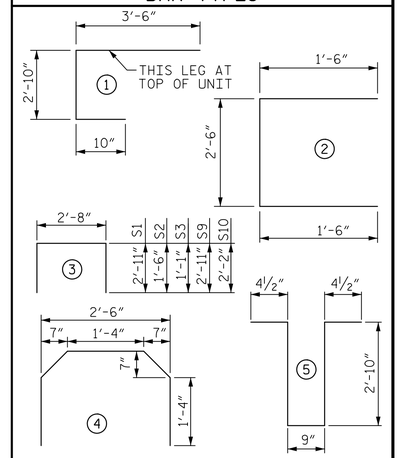

ALL BAR DIMENSIONS ARE OUT TO OUT

BILL OF MATERIAL FOR ONE BOX GIRDER SECTION

BAR	NUMBER	SIZE	TYPE	LENGTH	WEIGHT
A1	16	#5	1	7'-2"	120
A2	28	#5	2	5'-6"	161
B1	12	#5	STR	34'-2"	428
K1	3	#4	5	7'-2"	14
K2	4	#4	STR	2'-8"	7
S1	66	#4	3	8'-6"	375
S2	66	#4	3	5'-8"	250
S3	74	#4	3	4'-10"	239
S4	10	#7	STR.	6'-0"	123
S5	80	#4	4	5'-8"	303
* S8	10	#5	STR	3'-9"	39
S9	18	#6	3	8'-6"	230
S10	18	#6	3	7'-0"	189

* NOTE: S8 BARS SHALL BE BENT BEFORE SHIPMENT, HEAT BENDING SHALL NOT BE ALLOWED

REINFORCING STEEL	2478	LBS.
8000 P.S.I. CONCRETE	12.8	CU. YDS.
0.6" Ø L.R. STRANDS	No. 35	

GIRDERS REQUIRED

NUMBER	LENGTH	TOTAL LENGTH
4	66'-5"	265'-8"

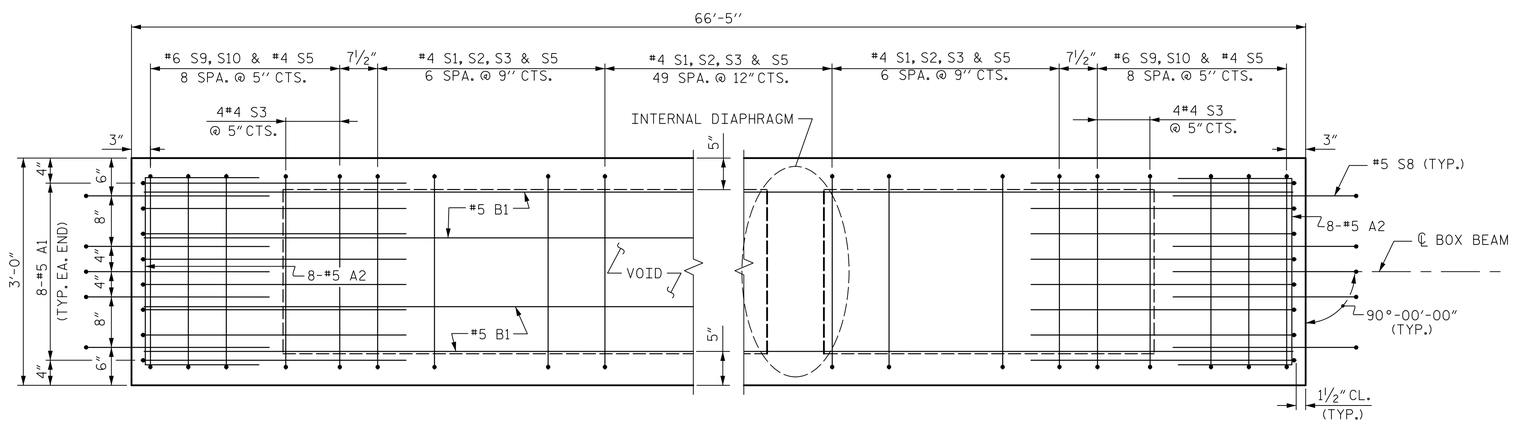

PLAN OF BOX GIRDER

FOR LOCATION OF INTERNAL DIAPHRAGMS, SEE FRAMING PLAN.
FOR REINFORCING STEEL IN INTERNAL DIAPHRAGMS, SEE SHEET 4 OF 5.

*SEE 3'-0" X 3'-3" PRESTRESSED CONCRETE BOX GIRDER DETAILS SHEET FOR INTERNAL DIAPHRAM DETAILS WITH ADDITIONAL REINFORCEMENT.

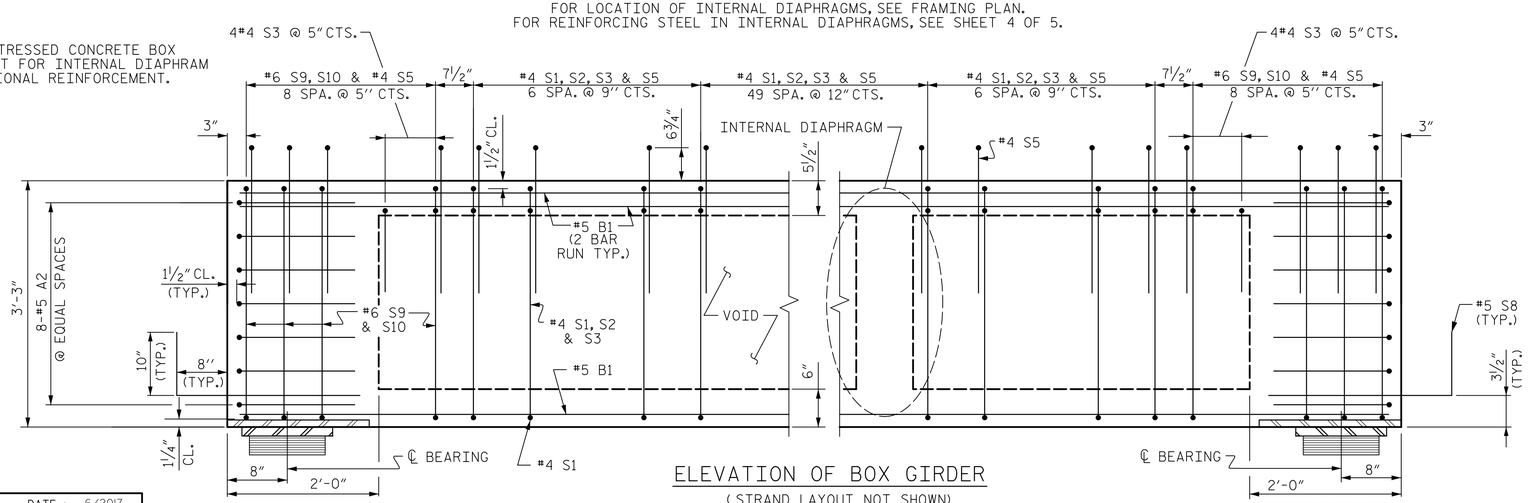

FIXED

ELEVATION OF BOX GIRDER

(STRAND LAYOUT NOT SHOWN)

FIXED

DRAWN BY : K. DONALD	DATE : 6/2017		
CHECKED BY : J. SLOAN	DATE : 10/2017		
DESIGNED BY : K. COMPTON	DATE : 4/2017		
DESIGN CHECKED BY : K. DONALD	DATE : 9/2017		

DOCUMENT NOT CONSIDERED FINAL UNLESS ALL SIGNATURES COMPLETED

PROJECT NO. B-4974

STANLY/MONTGOMERY COUNTY

STATION: 339+86.39 -L-

SHEET 3 OF 5

AECOM

AECOM TECHNICAL SERVICES, INC.
701 CORPORATE CENTER DRIVE, SUITE 475
RALEIGH, NC 27607
(919) 854-6200 www.aecom.com
AECOM License No. F-0342

NORTH CAROLINA PROFESSIONAL SEAL 035062 ENGINEER JOHN E. SLOAN
Docu Signed by:
8/30/2018

STATE OF NORTH CAROLINA
DEPARTMENT OF TRANSPORTATION
RALEIGH

SUPERSTRUCTURE

3'-0" X 3'-3"
PRESTRESSED CONCRETE
BOX GIRDER
SPAN H

REVISIONS								SHEET NO.
NO.	BY:	DATE:	NO.	BY:	DATE:			S-28
1			3					TOTAL SHEETS
2			4					148

DATE: 8/28/2018
TIME: 2:31:57 PM
USER: mattson
DGN: \\USRAL3tp00.ouo.aecomnet.com\Data\Projects\60536253\900_Work\910_CADD\0_NCDOT_TIP\Structures\04_Drawings\40_DST_B4974_SMU_S3.dgn